QuickFit® Lacer

QFL-130-B-2 & QFL-130-W-2

Revised July 2026

For more resources visit:
clickmedical.co/knowledge-base



QuickFit® Lacer Kit Contents:

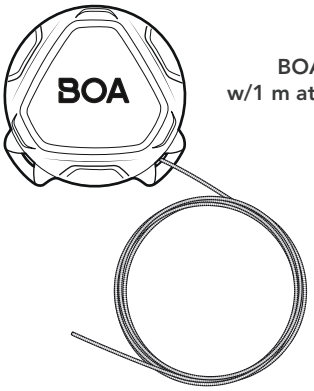

BOA® L6 Dials
w/1 m attached Lace (x2)



Rivets
(x32 post & cap)

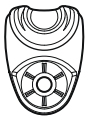

QuickLace
Guides (x20)

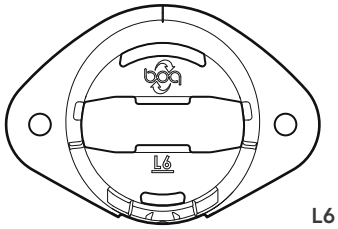

L6 Dial
Housings (x2)

Installation Hints:

Use QuickFit™ Tool 1/8" punch or other tool to make required holes.

If using existing holes for QuickLace Guides, remove metal or plastic grommets from eyelets to ensure a secure rivet setting.

Rivets can be hand snapped to position for verifying fit, but rivets must be set prior to applying significant closure force to the lace with the reel.

Press rivets at 90° with QuickFit™ Tool or other method; pressing at an angle will result in poor rivet setting.

Secure dial on thicker/sturdier part of tongue.

Recommended Tools:
- QuickFit™ Tool
- Marker Pen
- Wire Cutters

Advisory

Must be installed by a trained professional.

Lace will wear. At minimum, inspect monthly.

Overtightening could reduce circulation.

Do not use on patients with nerve issues.

Keep lace away from sharp edges.

See advisories in other languages:
clickmedical.co/advisories

6 MONTHS WARRANTY

WARRANTY:
www.clickmedical.co/terms/#warranty

U.S. Customers:
Contact Click Medical directly
Help@ClickMedical.co • Help Line: +1 970 670 7012

International Customers:
Please contact your local distributor

Prep device for installation:

Before starting install, determine number of QuickLace Guides needed and their locations along the edge of the opening. Guides should be evenly spaced (usually every other hole). Use the same number of guides on each side of the opening.

Use existing eyelet holes or mark and punch additional holes.

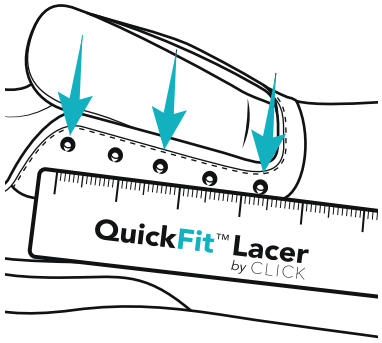

1 a) Attach QuickLace Guides by inserting male rivet from inside the device and through lace guide.

b) Snap female rivet cap on top of QuickLace Guide, holding the guide to the shoe.

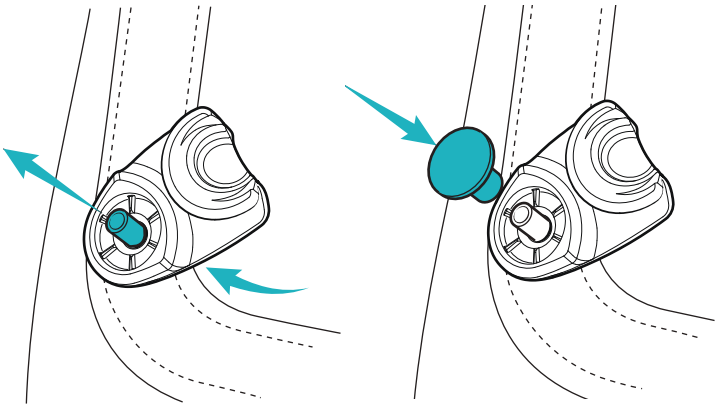

2 Once satisfied with Guide placement, secure rivets with setting tool.

Repeat for all guides.

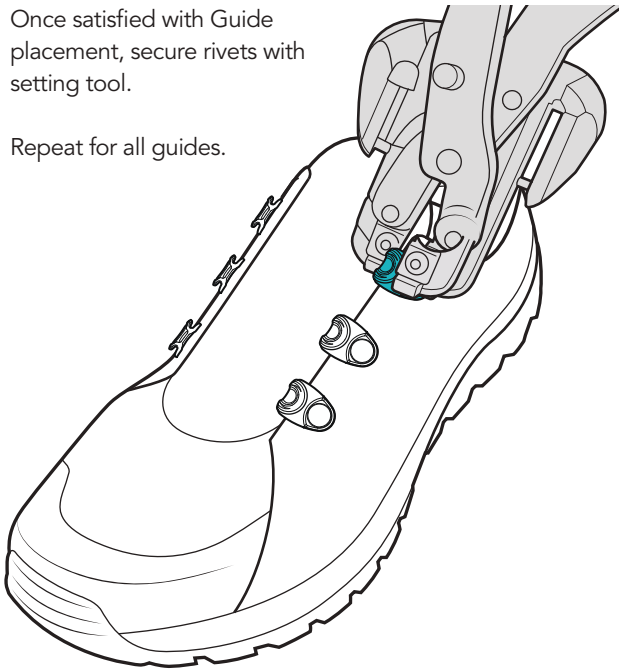

3 Determine location of Dial. Allow 1 cm of clearance between top of tongue and top of Housing. Orient lace openings in housing towards the top of the tongue.

Mark location of both holes.

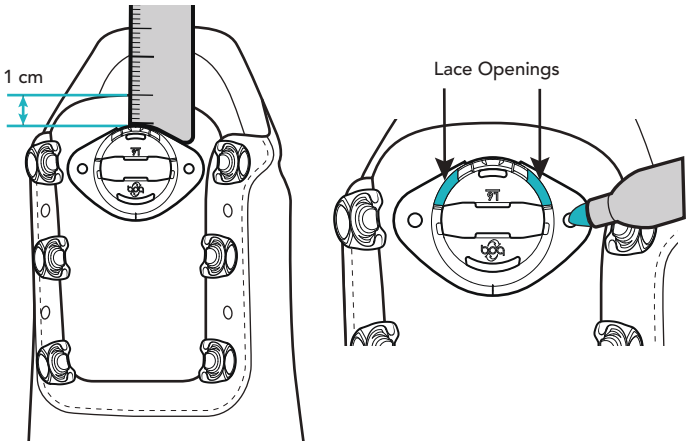

4 Punch hole using the 1/8" punch option on QuickFit™ Tool.

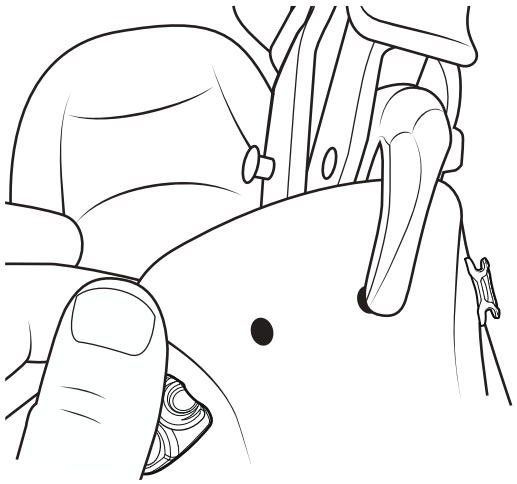

5 Attach Dial Housing to the tongue. Snap rivets as described in Step 1. If satisfied with placement, secure using QuickFit™ Tool.

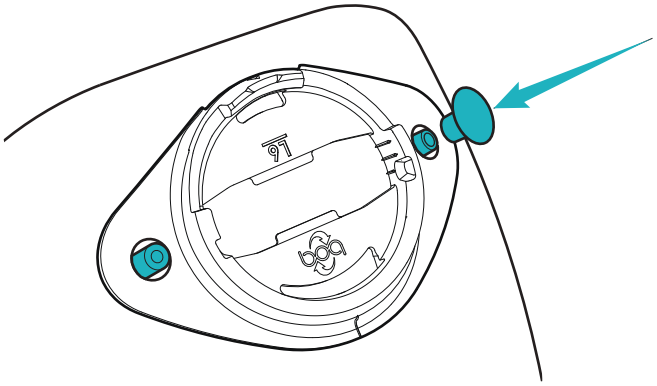

6 Lace the Guides as shown.

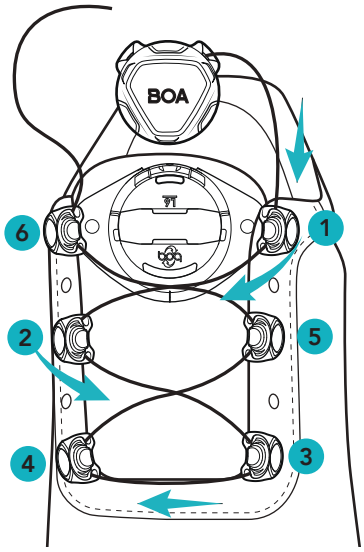

Lace can be fed straight through the Guide (A) or pulled into place (B). Lace can be snapped out of guide for quick donning or doffing.

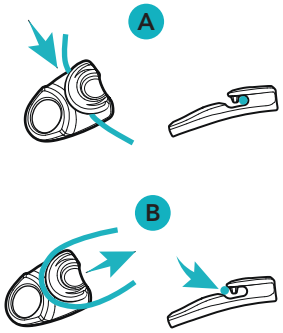

7 Pull slack out of lace crossings and measure out ~10 cm of lace from the last guide to the back of the dial. Trim lace with wire cutters.

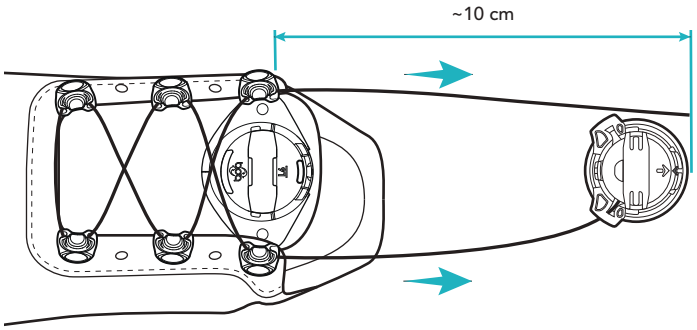

8 Feed the free end of the lace into the open lace port, on top of the plastic flange, not under it. Then push the lace through the dial until it comes out the bottom at the arrows.

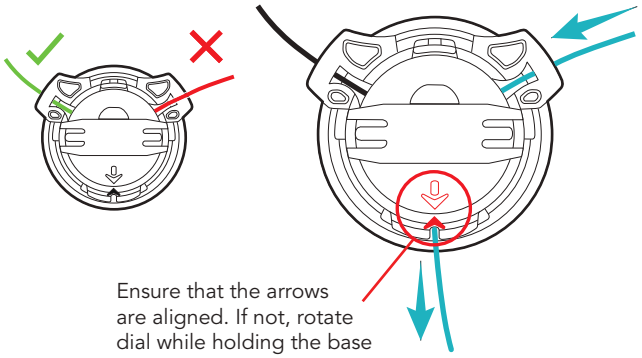

Ensure that the arrows are aligned. If not, rotate dial while holding the base until arrows align.

9 Tie a single overhand knot and trim the tail to ~5 mm. Then pull the knot into the dial body with a firm tug, seating the knot into the spool and concealing the tail of the lace.

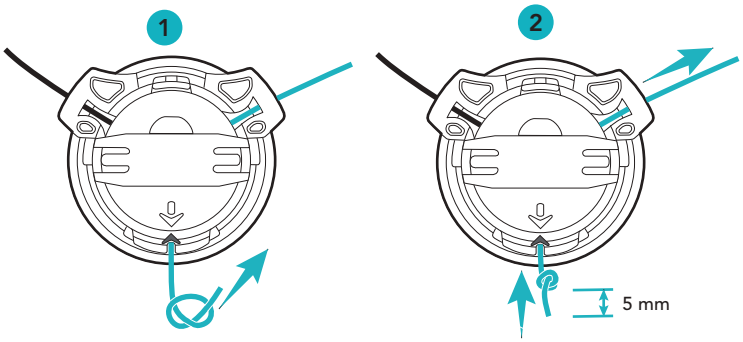

10 Insert the foot of the Dial into the slot in the Dial Housing. Then snap the lace end of the Dial into the top of the Collar, with the laces exiting the top of the Dial Housing.

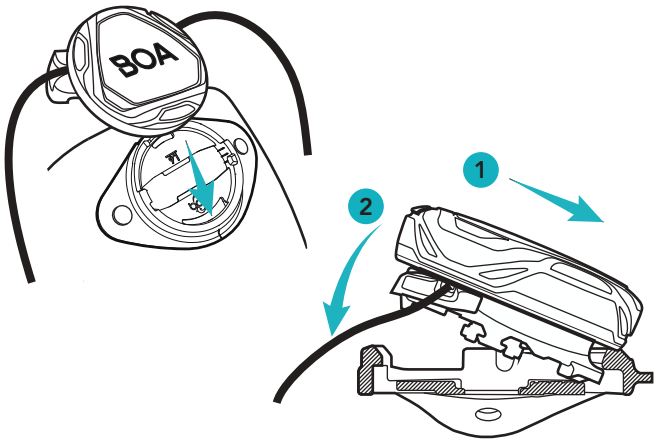

11 Test the operation of the system. Turn Dial clockwise to tighten the lace and pull the Dial out to release all tension. Lace can be snapped out of Guides for quick donning and doffing.

